Raytheon Aircraft
MANDATORY SERVICE BULLETIN

23, 33, 35, 36, 55, 58, 95

No. 2526, Rev. II
ATA Code 28-20

SUBJECT: **FUEL - DUKES INC. ELECTRIC FUEL BOOST PUMP INSPECTION AND MODIFICATION/OVERHAUL/REPLACEMENT**

SYNOPSIS OF CHANGE: Revised the Service Bulletin to include additional airplanes and increase the compliance time for these additional airplanes.

REASON: This Service Bulletin is being issued to announce Dukes Service Bulletin No. 0002. The Dukes Service Bulletin is Mandatory and requires modification, overhaul, or replacement of Dukes electric fuel boost pumps equipped with carbon vanes prior to the 10 year time between overhaul (TBO) required on the fuel pumps. Carbon vanes on these fuel pumps have been known to shatter. The fragments of a shattered carbon vane can interfere with the downstream engine fuel system, resulting in reduced or lost engine power. Dukes is replacing the carbon vanes with vanes of an improved material, Nylatron.

EFFECTIVITY: **CIVIL AIRPLANES** (equipped with Dukes electric fuel boost pumps)

BEECHCRAFT Musketeer A23 and A23A, Serials M-3 and M-555 through M-1094;

Debonair/Bonanza 35-33, 35-A33, 35-B33, 35-C33, 35-C33A, E33, F33, and G33, Serials CD-681 through CD-1304;

Bonanza 35-C33A, E33A, and F33A, Serials CE-1 through CE-1237;

E33C and F33C, Serials CJ-1 through CJ-179;

S35, V35, V35A, and V35B, Serials D-6562 through D-10403;

Bonanza 36 and A36, Serials E-1 through E-2419;

Baron 95-55, 95-A55, and 95-B55, Serials TC-1 through TC-349, TC-351 through TC-1392, TC-1397 through TC-1401, and TC-1403 through TC-2456;

95-C55, D55 and E55, Serials TC-350, and TE-1 through TE-1201;

Baron 58 and 58A, Serials TH-1 through TH-1535;

Travel Air B95A, D95A and E95, Serials TD-453 through TD-721.

MILITARY AIRPLANES

Baron 95B55B (T-42A), Serials TF-1 through TF-70.

MANDATORY

No BECP; M

Issued: December, 1993
Revised: November, 1995

991-39071 Rev. 4/98

Service Bulletins (red border) includes changes, inspections and modifications that could affect safety or crashworthiness. RAC considers compliance with these Service Bulletins to be mandatory. RAC also issues Service Bulletins with no border which are designated as either recommended or optional in the compliance section within the bulletin. In the case of recommended Service Bulletins, RAC feels the changes, modifications, improvements or inspections will benefit the owner/operator and although highly recommended, Recommended Service Bulletins are not considered mandatory at the time of issuance. In the case of optional Service Bulletins, compliance with the changes, modifications, improvements or inspections is at the owner/operator's discretion. Both classes are mailed to:

(a) RAC Authorized Service Centers.

(c) Those having a publications subscription.

Information on Owner Notification Service or subscriptions can be obtained through any RAC Authorized Service Center. As Mandatory Service Bulletins and Service Bulletins are issued, temporary notification in the Service Bulletin Master Index should be made until the index is revised. Warranty will be allowed only when specifically defined in the Service Bulletin and in accordance with the RAC Warranty Policy.

Unless otherwise designated, RAC Mandatory Service Bulletins, Service Bulletins and RAC Kits are approved for installation on RAC airplanes in original or RAC modified configurations only. RAC Mandatory Service Bulletins, Service Bulletins and Kits may not be compatible with airplanes modified by STC installations or modifications other than RAC approved kits.

Member of GAMA
General Aviation Manufacturers Association

Raytheon Aircraft

Recall _____
Receiver _____

COMPLIANCE: Beech Aircraft Corporation considers this to be a mandatory modification and it must be accomplished as soon as possible after receipt of this Service Bulletin, but no later than the next 100 flight hours or by August 1, 1995, whichever comes first.

For BEECHCRAFT Musketeer A23 and A23A, serials M-3 and M-555 through M-1094 ONLY:

Beech Aircraft Corporation considers this to be a mandatory modification and it must be accomplished as soon as possible after receipt of this Service Bulletin, but no later than the next 100 flight hours or annual inspection, whichever comes first.

An Airworthiness Directive has been requested on the matter covered by this Service Bulletin.

APPROVAL: Engineering data contained in this Service Bulletin is FAA Approved.

MANPOWER: The following information is for planning purposes only:

Estimated man-hours to inspect fuel boost pump(s): 3 hours.

Estimated man-hours to replace each fuel boost pump: 2 hours.

Suggested number of men: 1 man.

The above is an estimate based on experienced, properly equipped personnel complying with this Service Bulletin. Occasionally, after work has started, conditions may be found which could result in additional man-hours.

MATERIAL: The following parts, if required for accomplishment of this Service Bulletin, may be ordered through a BEECHCRAFT Authorized Outlet:

Part Number	Description	Quantity Per Airplane
2140-220	Dukes Rotor Kit (for modification)	As Required *
2140-224	Dukes Overhaul Kit (for overhaul)	As Required *

* One kit per fuel boost pump.

REFER TO DUKES SERVICE BULLETIN NO. 0002 FOR APPLICABLE FUEL PUMP PART NUMBERS.

SPARES AFFECTED: None.

WARRANTY CREDIT: None.

SPECIAL TOOLS: None.

WEIGHT AND BALANCE: None.

REFERENCES: Dukes, Inc. Mandatory Service Bulletin No. 0002, dated 5-17-94.

Parts Breakdown and Overhaul (instructions) for Dukes 4140 Series Electric Fuel Boost Pump.

PUBLICATIONS AFFECTED: It is recommended that a note to "See Service Bulletin No. 2526, Rev. II" be made in the appropriate chapter/section of the applicable Parts Catalog.

ACCOMPLISHMENT INSTRUCTIONS: This Service Bulletin shall be accomplished as follows:

1. Gain access to the engine fuel boost pump(s).
2. Refer to Dukes Service Bulletin No. 0002 (attached) and inspect the fuel pump for a yellow decal on the base or the letters "NV" following the part number on the ID plate.
   a. If a fuel pump has a yellow decal on the base or the letters "NV" following the part number on the fuel pump ID plate, no further action is necessary until the required 10 year TBO for the fuel pumps has been reached.

CAUTION

Modification or overhaul of a Dukes fuel pump must be done by Dukes, Inc. or an FAA certified repair facility. Otherwise, replacement of the fuel pump is required.

   b. If a fuel pump does not have a yellow decal on the base or the letters "NV" following the part number on the ID plate, it must be modified, overhauled, or replaced. Refer to the Dukes Service Bulletin, and the Parts Breakdown and Overhaul instructions (for Dukes 4140 series fuel pumps).
3. Replace any panels or other equipment removed to facilitate this Service Bulletin.

NOTE

Beech Aircraft Corporation assumes no responsibility for supplying future supplier bulletins or revisions to this vendor service bulletin.

RECORD COMPLIANCE: Upon completion of this Service Bulletin, make an appropriate maintenance record entry.

NOTE

If you are no longer in possession of this airplane, please forward this information to the present owner.

dukes, inc.
9060 winnetka avenue
northridge, california 91324

MANDATORY SERVICE BULLETIN

NO. 0002/PAGE 1 5-17-94

SUBJECT: DUKES INC. ELECTRIC FUEL BOOST PUMPS

PURPOSE: THIS BULLETIN IS NECESSITATED BY THE FACT THAT SOME OF THE CARBON VANES IN THE OLDER PUMPS HAVE SHATTERED DUE TO THE INGESTION OF CONTAMINATES INTO THE PUMP. IN SOME CASES THESE PARTICLES HAVE FOUND THEIR WAY TO THE MAIN ENGINE FUEL PUMP AND CAUSED THE REED TYPE VALVES TO MALFUNCTION, RESULTING IN REDUCTION OR LOSS OF ENGINE POWER.

NOTE: ANY PUMP EITHER NEW OR OVERHAULED BY DUKES INC. AFTER 1/1/88 ALREADY CONTAINS NYLATRON VANES. THESE PUMPS CAN BE IDENTIFIED BY EITHER A YELLOW DECAL ON THE BASE OF THE PUMP OR BY THE LETTERS "NV" FOLLOWING THE PART NUMBER. PUMPS IDENTIFIED AS CONTAINING NYLATRON WILL NOT REQUIRE SERVICE UNTIL THE TEN YEAR TBO HAS BEEN REACHED.

COMPLIANCE: COMPLIANCE MUST BE ACCOMPLISHED BY ONE OF THE FOLLOWING METHODS:

1. REPLACEMENT OF EXISTING PUMP WITH A NEW UNIT.
2. INSTALLATION OF DUKES ROTOR KIT #2140-220 IN EXISTING PUMP.
3. OVERHAUL OF EXISTING PUMP BY INSTALLATION OF DUKES OVERHAUL KIT #2140-224.

NOTE: DUKES RECOMMENDS ALL PUMPS BE OVERHAULED EVERY 10 YEARS. (SEE DUKES SERVICE BULLETIN 0004.) USE KIT #2140-220 FOR PUMPS NOT OLDER THAN 10 YEARS SINCE NEW OR LAST OVERHAUL. USE KIT #2140-224 OVERHAUL KIT FOR PUMPS 10 YEARS OR OLDER SINCE NEW OR LAST OVERHAUL.

REQUIRED COMPONENT PARTS MUST BE PURCHASED FROM BEECHCRAFT OR THEIR AUTHORIZED DEALERS. COMPLIANCE IS MANDATORY WITHIN THE NEXT 100 HOURS OR NOT LATER THAN 8/1/95.

RESPONSIBILITY: WILL BE THE OWNER/OPERATOR.

EFFECTIVITY: SEE ATTACHED LIST FOR AFFECTED DUKES PART NUMBERS.

dukes, inc.
9060 winnetka avenue
northridge, california 91324

MANDATORY SERVICE BULLETIN

NO. 0002/PAGE 2

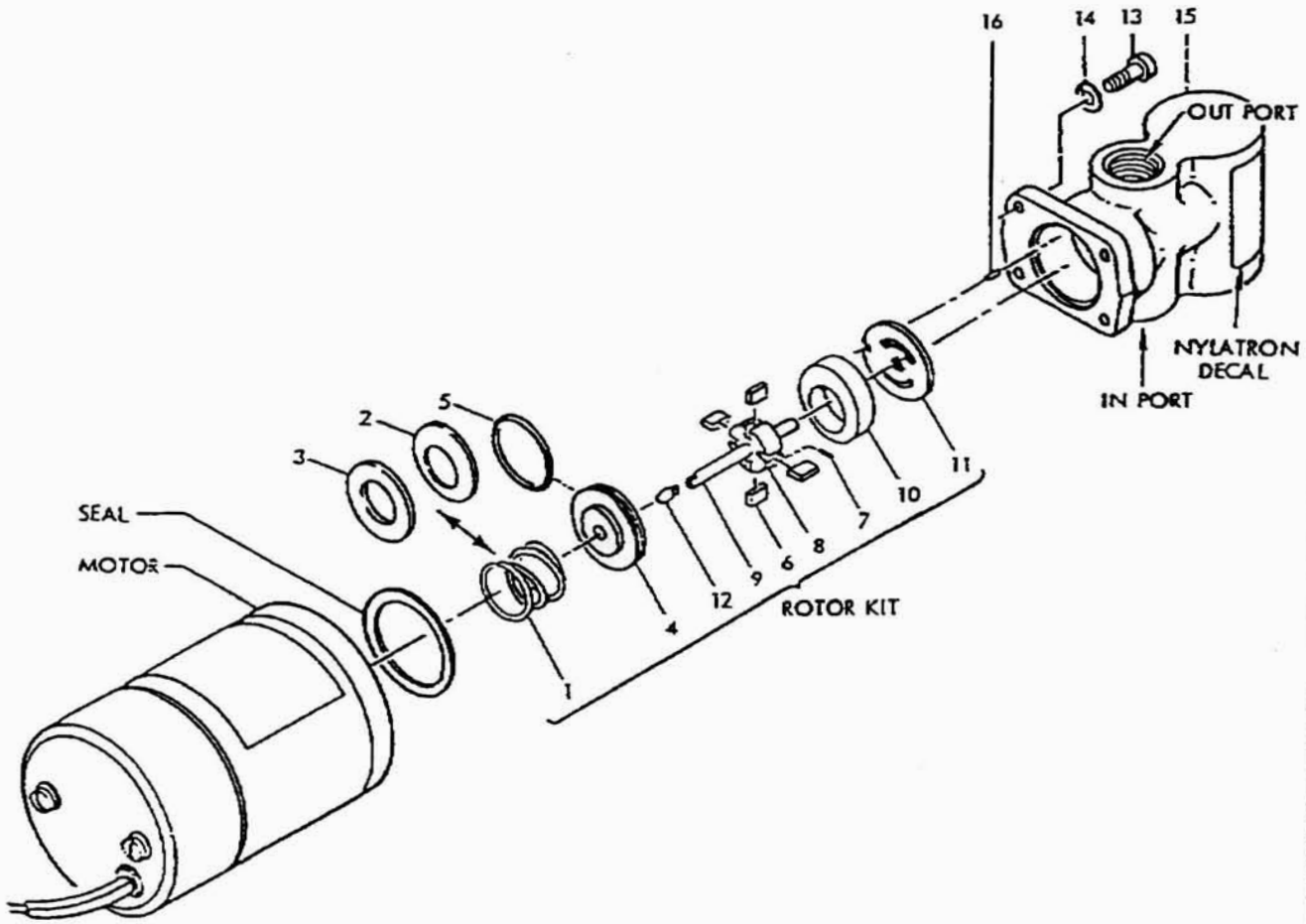

DUKES 4140 SERIES
ELECTRIC FUEL BOOST PUMP

dukes, inc.
9060 winnetka avenue
northridge, california 91324

MANDATORY SERVICE BULLETIN

BEECHCRAFT

4140-00	Prior to S/N:	2835
4140-00-1	Prior to S/N:	3681
4140-00-7	Prior to S/N:	2141
4140-00-11	Prior to S/N:	1789
4140-00-39	Prior to S/N:	6264
4140-00-103	Prior to S/N:	0444
4150-00-1	Prior to S/N:	ALL
4258-00	Prior to S/N:	0378
4404-00-1	Prior to S/N:	9864
4404-00-7	Prior to S/N:	0924
4613-00-1	Prior to S/N:	0820
4613-00-3	Prior to S/N:	0355
1132-00-1	Prior to S/N:	0167
1171-00-1	Prior to S/N:	0807
1296-00-1	Prior to S/N:	3535
1420-00-1	Prior to S/N:	0251