Beechcraft SERVICE BULLETIN
Published by the Customer Service Division

No. 67-23
Rev. I

SUBJECT: INSTALLATION OF PLACARDS AND MARKING TRAVEL LIMITS ON THE STABILATOR TAB INDICATOR.

AIRCRAFT AFFECTED: PART I (Installation of placard on the left side upholstery panel.) All BEECHCRAFT Musketeers Model 23, A23, and A23A prior to serial M-1035 except M-1; Model A23-19 prior to serial MB-253; and Model A23-24 prior to serial MA-220.

PART II (Marking travel limits on the stabilator tab indicator.) All BEECHCRAFT Musketeers Model 23, A23, and A23A prior to serial M-1018; Model A23-19 prior to serial MB-192; and Model A23-24 prior to serial MA-194.

PART III (Installation of placard above the battery and alternator switches.) All BEECHCRAFT Musketeers Model A23 and A23A, serials M-555 through M-1131; Model A23-19, serials MB-1 through MB-340; and Model A23-24, serials MA-1 through MA-317.

REASON FOR CHANGE: To comply with Federal Aviation Administration request.

ACCOMPLISHMENT: As soon as possible upon receipt of this bulletin.

DESCRIPTION: PART I - The above noted aircraft should have placard, P/N 169-534052 installed directly below the operational limitations placard on the left side panel. The placard is to be installed with 2 ea. PK65A4-6 screws.

PART II - The above noted aircraft should have the travel limits of the stabilator tab indicator marked on the tab control window edge with black paint as shown in figure 1.

NOTE

Make sure the stabilator trim tab is rigged properly as described in the Shop Manual, before marking the travel limits.

The suggested black paint specification is Wornow 2-700, however any flat black paint may be used.

PART III - The above-noted aircraft should be inspected to determine if the placard over the battery and alternator switches conforms to that shown in Figure 3. In the event it does not, the old placard should be removed and Placard P/N 169-324040-1 should be installed. The screened text of the old placard may be

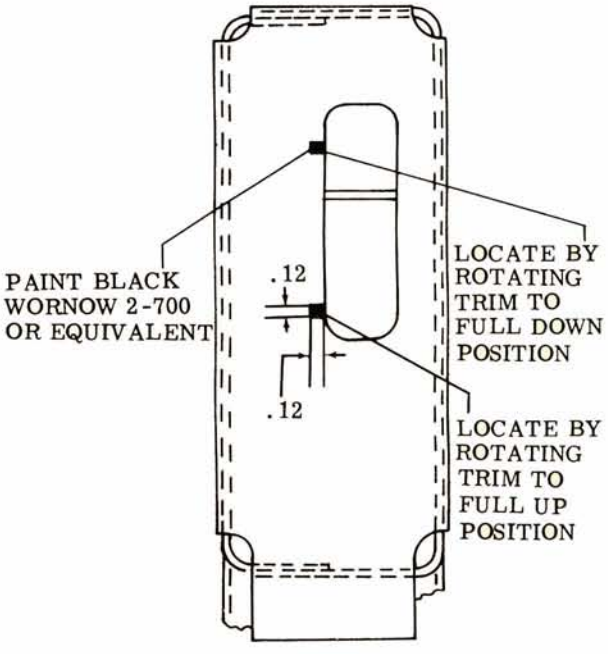

Figure 1

867
R668

THE OPERATION, CARE AND MAINTENANCE OF AN AIRPLANE IS THE OWNERS RESPONSIBILITY. AS CONDITIONS WARRANT, BEECH AIRCRAFT CORPORATION ISSUES SERVICE BULLETINS AND SERVICE LETTERS RECOMMENDING MODIFICATIONS AND OPERATIONAL PROCEDURES TO ENABLE THE OWNER TO GET THE MAXIMUM UTILITY AND SAFETY FROM HIS AIRPLANE.

THESE BULLETINS AND LETTERS ARE AVAILABLE TO BEECHCRAFT OWNERS THROUGH THEIR BEECHCRAFT DISTRIBUTOR OR DEALER. WHEN SERVICE BULLETINS AND LETTERS ARE ISSUED, A TEMPORARY RECORDING OF THE PUBLICATION SHOULD BE MADE ON THE APPROPRIATE INDEX.

removed without affecting the subpanel by rubbing quite hard with a cloth saturated with MUFTI spot remover or a suitable substitute. After removing the original text, affix the placard P/N 169-324040-1 in the same location. See Figure 2.

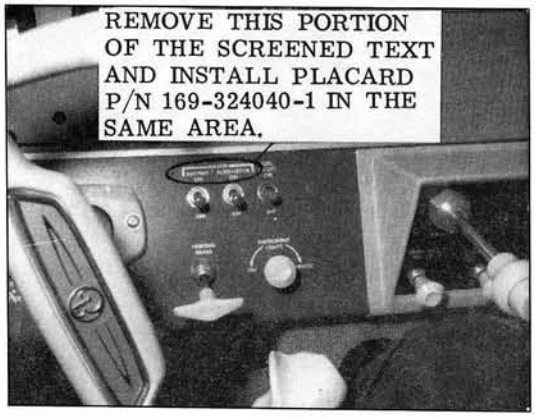

Figure 2

The edges of the placard may be sealed with clear lacquer or varnish to assure long placard life.

Upon completion of the above installations, make an appropriate entry in the aircraft log book, fill out and return the attached compliance card to BEECH AIRCRAFT CORPORATION. The following parts are required for the above installation.

PART NUMBER	DESCRIPTION	QUANTITY
169-534052	Placard	1
169-324040-1	Placard	1
PK65A4-6	Screw	2

Figure 3

NOTE

Those aircraft having had original Service Bulletin No. 67-23 complied with need not be reinspected.