Beechcraft

CLASS I
SERVICE INSTRUCTIONS

No. 0390-241
ATA Code 72-00

SUBJECT: POWER PLANT, INSPECTION OF THE PROPELLER GOVERNOR DRIVE ACCESSORY HOUSING.

AIRCRAFT AFFECTED: BEECHCRAFT Musketeers, Models A23-24 and A24, serials MA-1 through MA-368 which have the constant speed propeller installation, and Model A24R, serials MC-2 through MC-26 except MC-5, MC-7, MC-10, MC-17, and MC-22 through MC-25.

REASON FOR INSPECTION: To ensure proper assembly of the propeller governor drive accessory housing.

ACCOMPLISHMENT: As soon as practical after receipt of these Service Instructions, but within the next 25 hours of flight time.

DESCRIPTION: On BEECHCRAFT Musketeers, models and serials noted above, it is recommended that the propeller governor drive accessory housing be inspected for proper positioning of the accessory-driven gear washer. Inspection may be accomplished as described in the following procedure. (See illustration, Page 2.)

1. Remove the engine cowling.
2. Remove the propeller governor access plate from the firewall.
3. Remove the propeller governor from the governor drive accessory housing.
4. Inspect the aft end of the governor drive shaftgear for positioning of the accessory-driven gear washer under the external retaining ring.
5. If the accessory-driven gear washer is positioned under the retaining ring, proceed to Step 6. If the accessory-driven gear washer is not positioned under the retaining ring, perform the following procedure:
   a. Remove the governor drive accessory housing from the engine accessory case.
   b. Remove the retaining ring from the aft end of the governor drive shaftgear and remove the shaftgear from the governor drive accessory housing.
   c. Remove the accessory-driven gear washer from the shaftgear and replace the shaftgear in the governor drive accessory housing.
   d. Install the accessory-driven gear washer over the shaftgear and install the retaining ring on top of the washer.
   e. Reinstall the governor drive accessory housing on the engine accessory case.
6. Reinstall the governor and the governor access plate.
7. Start the engine and exercise the propeller control several times, then shut down the engine and check for oil leaks.
8. Reinstall the engine cowling.

None

770

Beech Aircraft Corporation issues service information for the benefit of owners and fixed base operators in the form of three classes of Service Instructions. CLASS I (Red Border) are changes, inspections, and modifications that could affect safety. The factory considers compliance mandatory. CLASS II (Green Border) covers changes, modifications, improvements or inspections the factory feels will benefit the owner and although highly recommended, they are not considered mandatory compliance, unless specified at the time of issuance. Class I and II are mailed to:

(a) BEECHCRAFT Aero or Aviation Centers and International Distributors and Dealers.
(b) Owners of record on the FAA Registration list and the BEECHCRAFT International Owner Notification Service List.
(c) Those having a publications subscription.

CLASS III (No Border) covers changes which are optional, maintenance aids, product improvement kits and miscellaneous service information. Compliance is at the owner or operator's prerogative. Copies of Class III are distributed per a and c above. Information on Owner Notification Service or Subscriptions can be obtained through any BEECHCRAFT Aero or Aviation Center, International Distributor and Dealer or the Factory. As Service Instructions are issued, temporary notation in the index should be made until the index is revised. Warranty will be allowed only when specifically defined in the Service Instructions and in accordance with Beech Warranty Policy.

Member of GAMA
General Aviation Manufacturers Association

98 34239D

CLASS I

Service Instructions No. 0390-241

After complying with these Service Instructions make an appropriate entry in the engine log book and return a completed compliance card to Beech Aircraft Corporation.

Man-hours to accomplish inspection: 3 hours.
Number of men required to accomplish inspection: 1 man.
Man-hours to accomplish inspection and rework: 4 hours.
Number of men required to accomplish inspection and rework: 1 man.

COMPLIANCE CARD RETURN REQUIRED

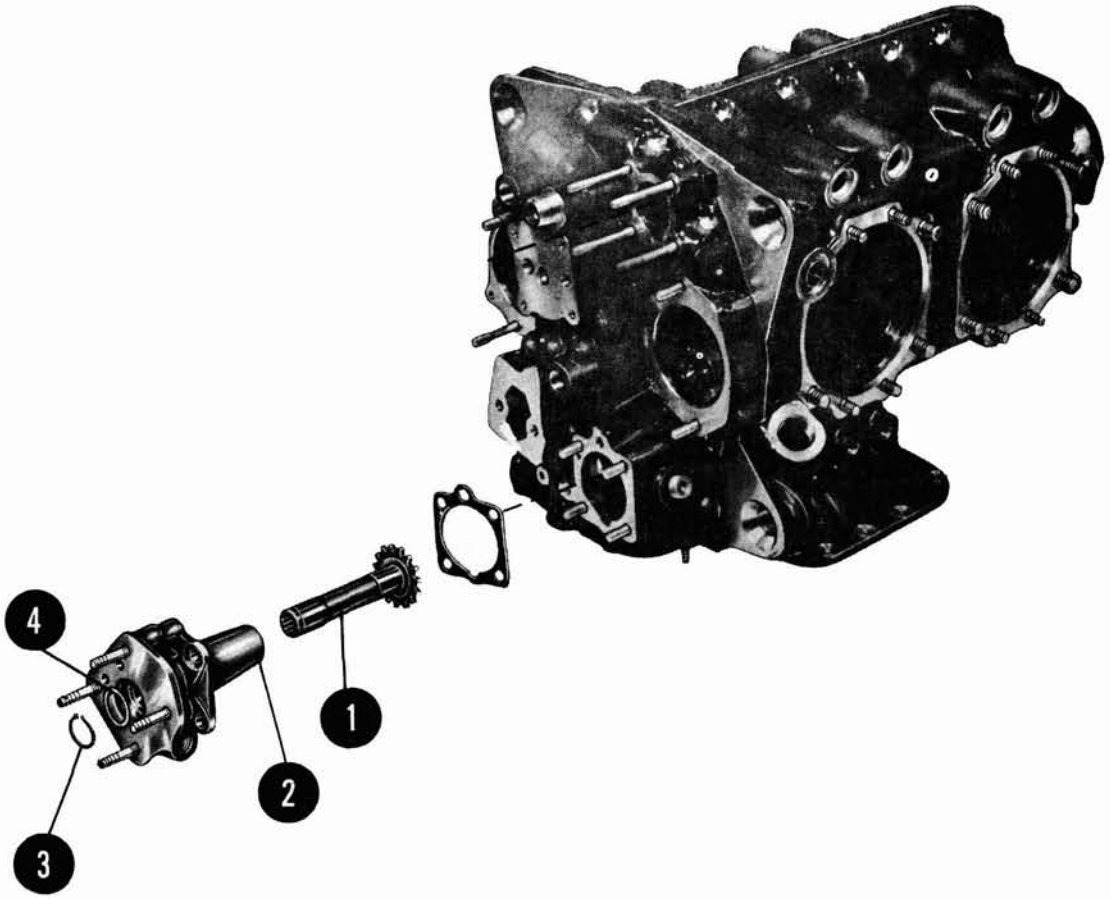

PROPELLER GOVERNOR DRIVE

1. Propeller Governor Drive Shaftgear
2. Propeller Governor Drive Accessory Housing
3. External Retaining Ring
4. Accessory-Driven Gear Washer