Beechcraft

CLASS II

SERVICE INSTRUCTIONS

19, 23, 24R

No. 0598-491
ATA Code 23-20

SUBJECT: AVIONICS - ANTENNA INSTALLATION - REINFORCEMENT OF EMERGENCY LOCATOR ANTENNA MOUNT

EFFECTIVITY: BEECHCRAFT Sundowner C23, serials M-1379 through M-1445, M-1447 and M-1453 through M-1476;
Sport B19, serials MB-526 through MB-600;
Sierra A24R and B24R, serials MC-106 through MC-157.

COMPLIANCE: At the earliest convenience of the owner, preferably no later than the next scheduled inspection.

REASON: To reduce the possibility of the fuselage skin cracking in the vicinity of the emergency locator transmitter antenna.

DESCRIPTION: The existing doubler under the antenna is removed. A larger and heavier doubler is installed.

APPROVAL: FAA Approved - DOA CE-2.

MANPOWER: The following information is for planning purposes only:

Estimated man-hours: 3 hours.
Suggested number of men: 2 men.

MATERIAL: The following parts required for completion of this modification are available through your BEECHCRAFT Parts and Service Outlet.

NEW PART NUMBER	OLD PART NUMBER	DESCRIPTION	QUANTITY	*PRICE
169-340051-9	169-340051-7	Doubler	1	To be advised
AN960-916	None	Washer	1	** $1.50
100951N063XE	None	Washer	1	To be advised

*Suggested selling price (subject to change without notice).
**Price for a minimum buy quantity of 50.

If the rework is accomplished by an authorized BEECHCRAFT Facility, the parts and labor will be a standard warranty allowance when a completed warranty form is forwarded to Parts and Service Operations, Beech Aircraft Corporation, Wichita, Kansas 67201. Offer expires August 31, 1974.

SPECIAL TOOLS: None.

WEIGHT AND BALANCE: None.

REFERENCES: None

AW-895
973

Beech Aircraft Corporation issues service information for the benefit of owners and fixed base operators in the form of three classes of Service Instructions. CLASS I (Red Border) are changes, inspections, and modifications that could affect safety. The factory considers compliance mandatory. CLASS II (Green Border) covers changes, modifications, improvements or inspections the factory feels will benefit the owner and although highly recommended, they are not considered mandatory compliance, unless specified at the time of issuance. Class I and II are mailed to:

(a) BEECHCRAFT Aero or Aviation Centers and International Distributors and Dealers.
(b) Owners of record on the FAA Registration list and the BEECHCRAFT International Owner Notification Service List.
(c) Those having a publications subscription.

CLASS III (No Border) covers changes which are optional, maintenance aids, product improvement kits and miscellaneous service information. Compliance is at the owner or operator's prerogative. Copies of Class III are distributed per a and c above. Information on Owner Notification Service or Subscriptions can be obtained through any BEECHCRAFT Aero or Aviation Center, International Distributor and Dealer, or the Factory. As Service Instructions are issued, temporary notation in the index should be made until the index is revised. Warranty will be allowed only when specifically defined in the Service Instructions and in accordance with Beech Warranty Policy.

Member of GAMA
General Aviation Manufacturers Association

98-34238D

CLASS II

PUBLICATIONS AFFECTED: None.

ACCOMPLISHMENT INSTRUCTIONS: This modification may be accomplished in the following manner.

1. Switch the ELT Transmitter OFF.
2. Remove the baggage compartment aft bulkhead access panel.
3. Remove the ELT antenna from the fuselage.
4. Drill out the five rivets which hold the existing doubler to the lower side of the upper fuselage skin and dorsal fairing.
5. Stop-drill any cracks which may exist.
6. Install the new 169-340051-9 doubler with MS20470AD3 rivets of the appropriate length (obtain locally) as shown in Figure 1. Additional rivets should be installed in the area of cracks.

NOTE

The doubler may be purchased through your local BEECHCRAFT Parts and Service Outlet or fabricated as indicated in Figure 2.

7. Reinstall the ELT antenna being certain to maintain the parts sequence indicated in Figure 1.
8. Reinstall the baggage compartment aft bulkhead access panel.
9. Switch the ELT Transmitter to the ARM position.

RECORD COMPLIANCE: Upon completion of these Service Instructions, make an appropriate maintenance record entry.

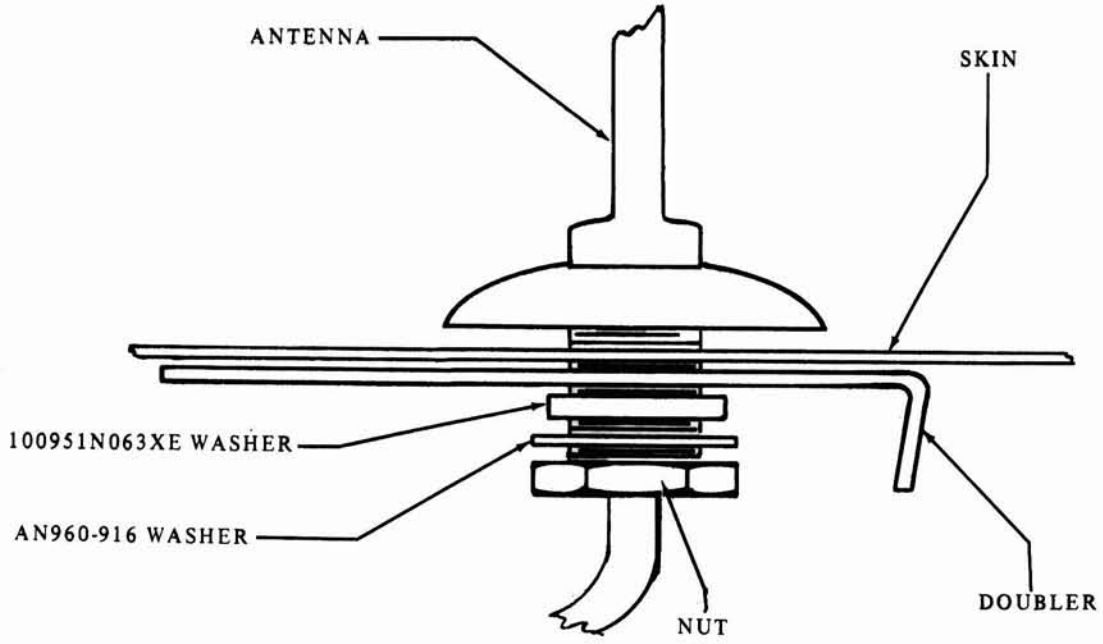

Figure 1.

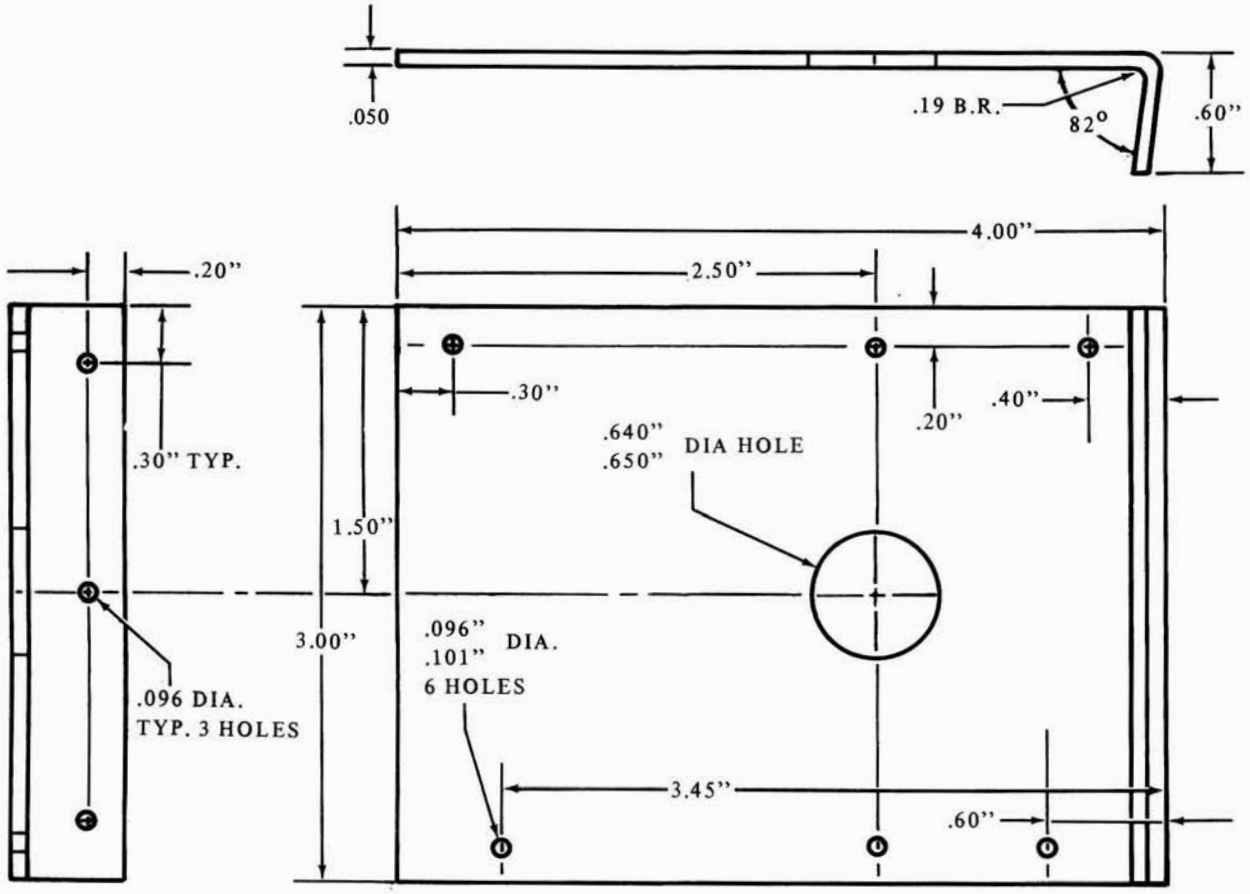
.050
.19 B.R.
82°
.60"
4.00"
2.50"
.20"
.30"
.20"
.40"
.640"
.650"
DIA HOLE
.30" TYP.
1.50"
3.00"
.096"
.101"
DIA.
6 HOLES
.096 DIA.
TYP. 3 HOLES
3.45"
.60"

Figure 2.